REVISIONS				
REV.	ZONE	DESCRIPTION	DATE	DRAWN

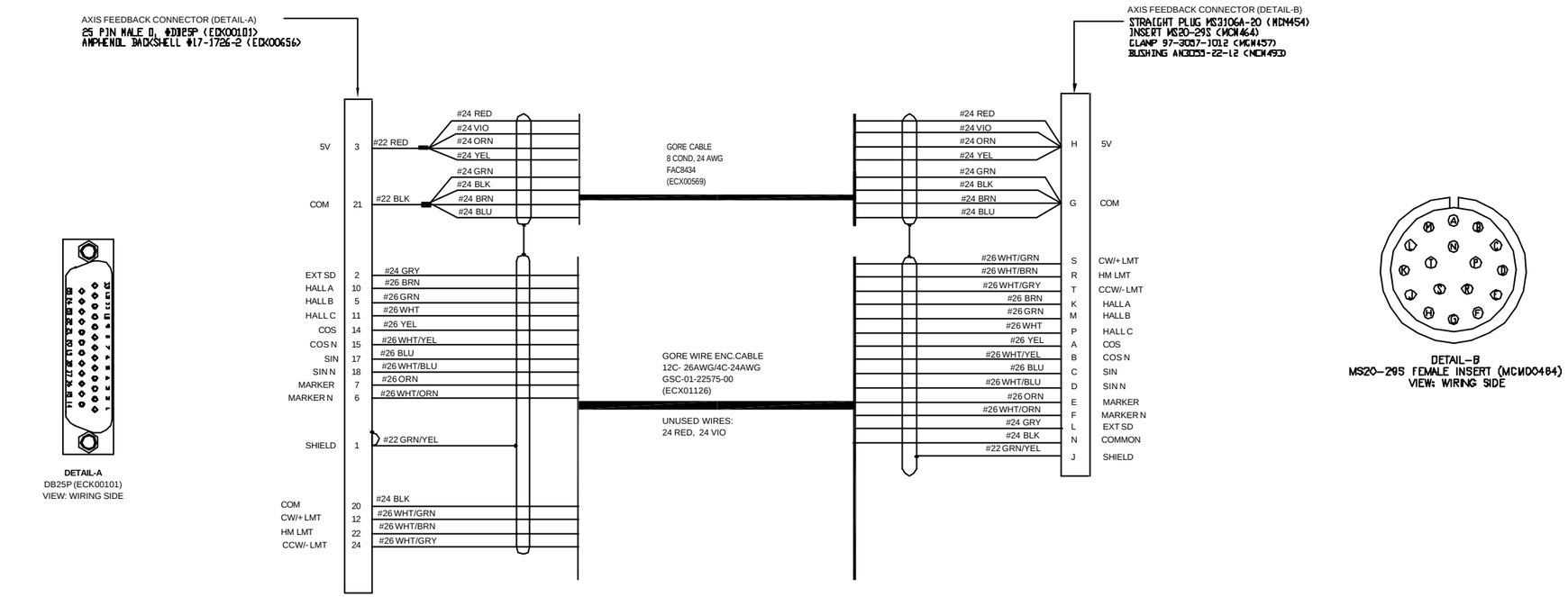

QTY X, XXXXXXXXXXXXXX

WO# XXXXXX

CUSTOMER:XXXXXXXXX

ORDER: XXXXXX

APPROVED: XXX RELEASED: XXXXXX

CUST FILENAME: XXXXXXX 630D2185-101 FEEDBACK CABLE.DWG

PART CODE: C21851-XX | XX = CABLE LENGTH IN DEICMETERS

PROPRIETARY INFORMATION
THIS DRAWING IS THE PROPERTY OF AEROTECH, INC. AND IS SUBMITTED IN CONFIDENCE AND SHALL NOT BE REPRODUCED NOR COPIED NOR DISCLOSED TO OTHERS UNDER PENALTY OF LAW.

AEROTECH. INC. 101 Zeta Drive
Pittsburgh, PA. 15238
(412)963-7470
www.aerotech.com

TOLERANCES ON
FRACTIONS ± 1/32 DECIMALS .XX ±.01 ANGLES ± 0.5°
OVER ± 1/16 .XXX ±.005

RMS FINISH EXCEPT AS NOTED

BRUSHLESS FEEDBACK CABLE,HI FLEX
146 DECIMETERS (48') MAX LENGTH
CABLE: BL FB-25DU-17MS-HF65-MAX146DM

DRAWN	AGS	5/01/07	PART CODE C21851-XX	SIZE D	630D2185-1	REV. -
CHECKED	JAB	5/01/07				
APPD.	JAB	5/01/07	SCALE NTS	FILE NAME 630D2185-101.DWG	SHEET 1 of 1	